Features

- 1-axis ± 180° / 2-axis ±10° / ±30° / ±90° Inclinometer
- MEMS technology for precise and reliable measurement
- Analog Outputs: 4-20mA/0-10V(combination possible)
- Accuracy: standard / high
- Zero adjustment available
- Factory programmable: measuring range, output value, filter…
- OEM customization options possible



Intended use

The **QG65/76N2** Analog **Inclinometer** is a **MEMS-based** inclination sensor with **Analog** interface. This device provides precise and reliable inclination measurement in (semi)static conditions. The use of this device in a machine or system is permitted only under the following conditions:

- The user is trained and competent in integrating and using inclination sensors in machinery.
- The user is familiar with the contents of both the datasheet and user manual.
- The device is used within the specified environmental conditions.
- The device is properly configured for its intended use.
- The device is mounted correctly as described in the datasheet and user manual.
- The device data is expressly not interpreted as safety data, except when used redundantly in a control system that is designed and tested for cross-check functionality between the primary and redundant devices.

Application

- Construction (excavator booms…)
- Agricultural Machinery (levelling, tilt control…)
- Solar panels (optimize alignment with the sun)
- Industrial Automation (robotic arms, conveyor…)

Technical Data*

Measuring Range: depending on type:	2-axis ±10° / ±30° / ±90° 1-axis ±180°
Supply voltage:	12 - 32 V DC
Output Current type: Output Voltage type:	4 - 20 mA 0 – 10 V
Frequency Response	0 – 10 Hz
Resolution:	0.01°
Accuracy High:	± 0,2° 2σ
Current Consumption:	≤ 25 mA
Output refresh rate	10 ms
Connection:	5p M12 male or 8p M12 male
Housing Material:	QG65: Faradex DS QG76: Stainless steel
Operating temperature:	-40 .. +80 °C
Degree of protection:	IP67

*Depending on configuration, specifications and accuracy may differ.

Further details can be found in the datasheets.

Certification, conformity

Available on the DIS website under Downloads and Datasheets.

Distribuída no Brasil pela LRI | vendas@lri.com.br | 51 2129-3000

Mechanical drawing

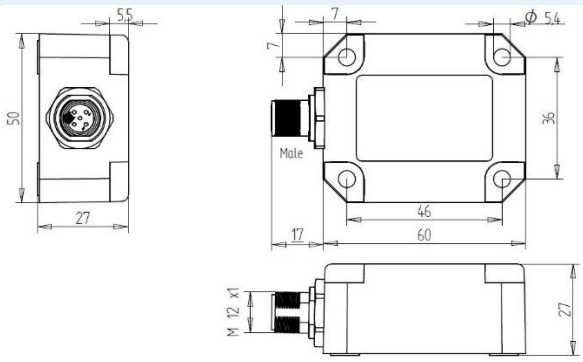

Figure 1 QG65 housing size – 60 x 50 x 27 mm

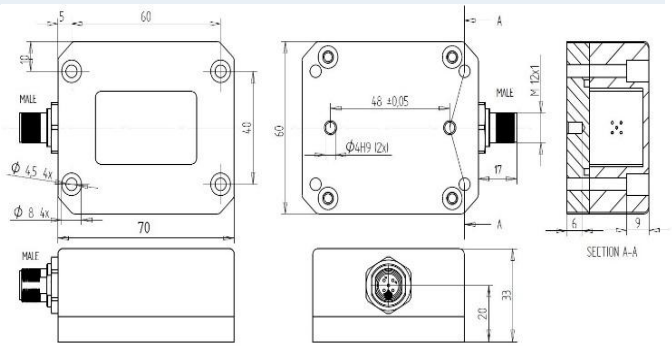

Figure 2 QG76 housing size – 70 x 60 x 33 mm

Mounting Instructions

- **Prepare the Mounting Surface:**
  Ensure the surface is perfectly flat to secure proper alignment and accurate measurements. To reduce the impact of vibrations on sensor accuracy, consider placing a rubber layer between the sensor and the mounting surface.
- **Mounting the Sensor:**
  - 1-Axis: Mount the sensor vertically. The factory default zero position is with the male connector pointing downward (see Figure 3). The sensor can be zero-adjusted at any position within the full measurement range.
  - 2-Axis: Mount the sensor horizontally. The factory default zero position is as shown in Figure 4. After installation, you can zero-adjust the sensor to correct any mechanical offsets within a ±5° range.
- **Fastening the Sensor:**
  For QG65 plastic housing: Use 4 M5 pan head screws (available on demand).
  For QG76 stainless steel housing: Use 4 M4 hexagon socket head screws (available on demand).
- **Zero adjustment** can eliminate mechanical offsets.



Figure 3 1-axis mounting



Figure 4 2-axis mounting

Electrical Connections

Pin	Assignment 1-axis	Assignment 2-axis
Pin 1	+ Supply Voltage	
Pin 2	For factory use only	Output Y
Pin 3	Gnd	
Pin 4	Output X	
Pin 5	Zero adjustment input (Programming interface)	

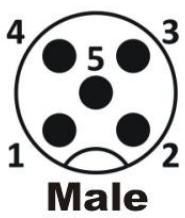

- For ISO 13766-1 and -2 (earth moving machinery) and ISO 14982 (agricultural), the sensor may not be directly powered from the vehicle's battery.
- For automotive (regulation 10) purposes, the sensor may be used as an immunity related device. The sensor may be powered directly from the vehicle battery.
- For QG76 Stainless housing, the enclosure must be electrically connected to the chassis of the vehicle.

Product Code Identification

QG65N2-KDXYh-010H-AV3-CM-UL

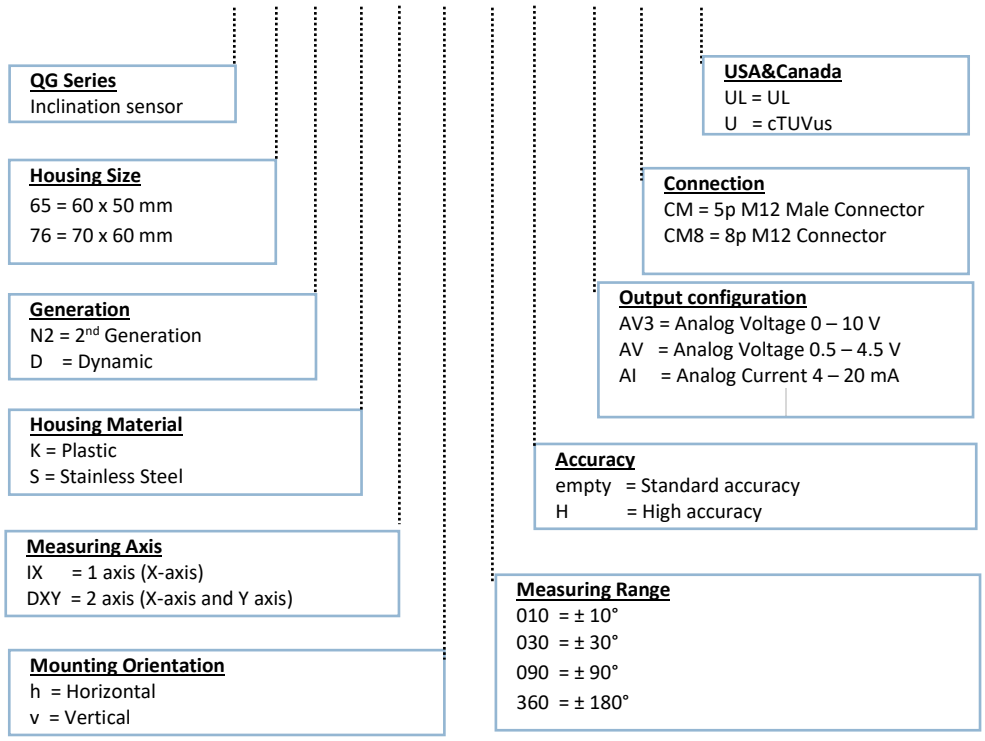

Product Identification can be found on DIS website.

Order Code

1 measuring axis

Standard Accuracy

14313	QG65N2-KIXv-360-AI-CM-UL	±180°, 4-20mA
14305	QG65N2-KIXv-360-AV3-CM-UL	±180°, 0-10V

High Accuracy

14317	QG65N2-KIXv-360H-AI-CM-UL	±180°, 4-20mA
14325	QG76N2-SIXv-360H-AI-CM-UL	
14309	QG65N2-KIXv-360H-AV3-CM-UL	±180°, 0-10V
14321	QG76N2-SIXv-360H-AV3-CM-UL	

2 measuring axis

Standard Accuracy

14310	QG65N2-KDXYh-010-AI-CM-UL	±10°, 4-20mA
14311	QG65N2-KDXYh-030-AI-CM-UL	±30°, 4-20mA
14312	QG65N2-KDXYh-090-AI-CM-UL	±90°, 4-20mA
14302	QG65N2-KDXYh-010-AV3-CM-UL	±10°, 0-10V
14303	QG65N2-KDXYh-030-AV3-CM-UL	±30°, 0-10V
14304	QG65N2-KDXYh-090-AV3-CM-UL	±90°, 0-10V

High Accuracy

14314	QG65N2-KDXYh-010H-AI-CM-UL	±10°, 4-20mA
14322	QG76N2-SDXYh-010H-AI-CM-UL	
14315	QG65N2-KDXYh-030H-AI-CM-UL	±30°, 4-20mA
14323	QG76N2-SDXYh-030H-AI-CM-UL	
14316	QG65N2-KDXYh-090H-AI-CM-UL	±90°, 4-20mA
14324	QG76N2-SDXYh-090H-AI-CM-UL	
14306	QG65N2-KDXYh-010H-AV3-CM-UL	±10°, 0-10V
14318	QG76N2-SDXYh-010H-AV3-CM-UL	
14307	QG65N2-KDXYh-030H-AV3-CM-UL	±30°, 0-10V
14319	QG76N2-SDXYh-030H-AV3-CM-UL	
14308	QG65N2-KDXYh-090H-AV3-CM-UL	±90°, 0-10V
14320	QG76N2-SDXYh-090H-AV3-CM-UL	

Distribuída no Brasil pela LRI | vendas@lri.com.br | 51 2129-3000

Measuring axis and direction

A single-axis inclinometer (vertical mount) measures the inclination in the vertical plane over the full range 0-360° (X-output). The default 0° position and the measuring direction are shown in Figure 8.



A dual-axis inclinometer (horizontal mount) measures the inclination on both X and Y axis. Measuring range is up to 90°. Due to the measurement principle, to achieve the best accuracy only one axis may tilt more than 45°.

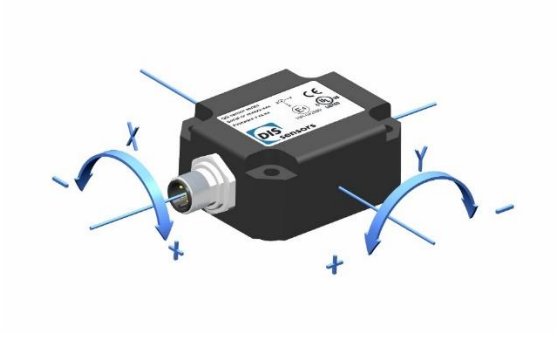

Other mounting options may require a customized model. Please contact our support team for further assistance.

Zero adjustment

Zero adjustment allows users to compensate for mechanical offsets of a horizontally mounted 2-axis device or set a customised 0° position of a vertically mounted 1-axis sensor. The measured inclination value at the 0° position will be stored in the device as a permanent offset, which is used to calculate the actual inclination output of the device.

Method

1. Bring the object with the mounted sensor to its zero position.
2. Apply power to the sensor and within 1 minute perform the zero adjustment as follow.
3. Connect zero adjustment input to ground for at least 0,5 seconds
4. Disconnect the connection. Normally this input should be left unconnected

1-axis ±180° sensors can be zero adjusted over the full range, the position of the male connector is at customer discretion.
2-axis sensors can only be zero adjusted in a horizontal position within an offset limit of ±5°.

Output signal current 4 – 20mA

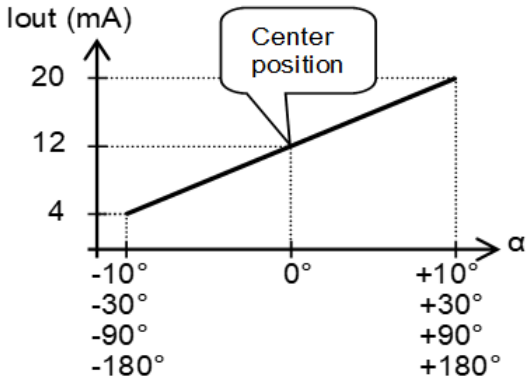

2-axis output with clipping outside measuring range.

Output signal voltage 0 – 10V

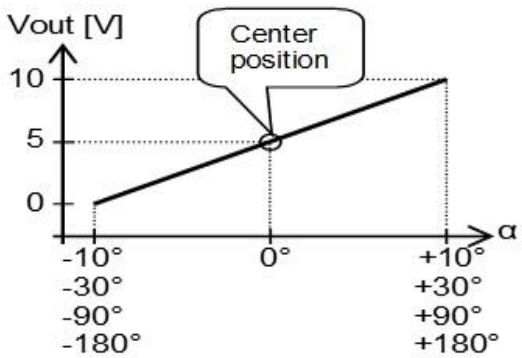

2-axis output with clipping outside measuring range.

The output value is factory programmable to any value within the ranges of 4-20mA and 0-10V.

Signal processing

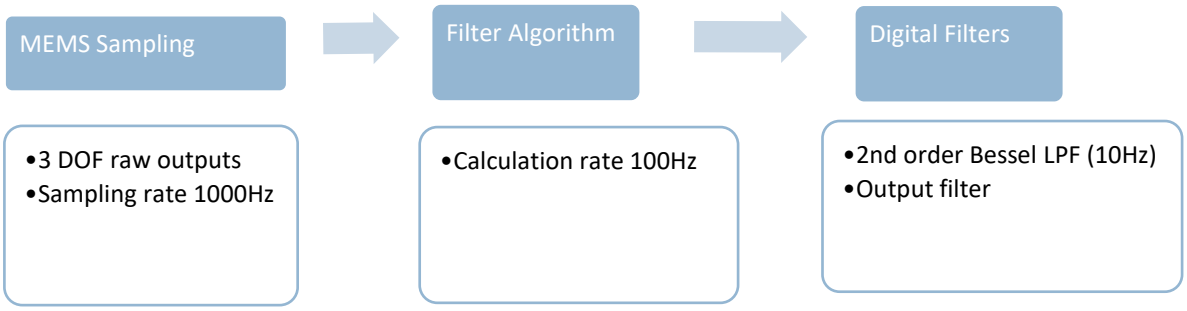

Sampling rate

Each axis of the acceleration MEMS is sampled by the internal microcontroller at a rate of 1000 Hz. Those samples are fed into the filter algorithm and will be processed further.

Filter algorithm

Filter algorithm is implemented to improve the quality of the sampled raw data. The calculation rate is 100Hz.

Digital filters

The inclination values can be further processed with digital filters, which can significantly eliminate noises or reduce the bandwidth, making the sensor much less sensitive to accelerations or vibrations. Different filters can be enabled/disabled or configured via the programming interface.

Bessel Low pass filter

Normally, an inclinometer with a bandwidth of 10Hz is fast enough for most applications. Therefore a 2nd order low-pass Bessel filter with a fixed cut-off frequency of 10Hz is implemented. You can only turn this filter ON/OFF. This filter is ON as default and effective on all sensing axes. For standard inclination measurements it is highly recommended to leave this filter on.

Output filter

An additional 1st order low-pass filter called '**output filter'** is implemented for further additional reduction of bandwidth and extra noise filtering. This filter is useful for slow-moving applications with a lower bandwidth than 10Hz. By setting a time-constant τ [1] the cut-off frequency can be calculated by the formula $f = 1 / (2\pi*\tau)$. A longer filter time results in a narrower bandwidth and therefore less noise but also causes a longer phase delay. This filter is OFF as default and effective on all sensing axes.

Normally this filter is used in addition to the 2nd order Bessel LPF. Therefore, it does not make sense to set the output filter to a higher frequency than 10Hz (i.e. τ should be >16ms). Common filter time are 50ms (3Hz), 100ms (1.6Hz) or 200ms (0.8Hz).

[1] τ time in which the output changes to 70% of the step after a step response

Distribuída no Brasil pela LRI | vendas@lri.com.br | 51 2129-3000

Firmware management

If a firmware version is mentioned on the label, it is the factory-installed firmware number.



Figure 5 - Firmware version

⚠ *The currently-installed firmware version might vary from the version on the sticker due to a firmware update. Always check the actual version..*

The firmware release notes are available at www.dis-sensors.com under “downloads/user manuals”.

Configuration Tool

The QG65/76N2 Analog Inclinometer includes a LIN programming interface. DIS is actively developing a configurator tool that will enable users to adjust sensor parameters and monitor live outputs. This configuration tool will be available soon and can be purchased separately.

Customize options

DIS offers a variety of customization options to meet your specific needs. You can choose from alternative cable lengths and types, including PVC, PUR, or TPE cables, to suit different environmental conditions. Additionally, we provide a range of connectors, such as M12, Deutsch, or custom-designed connectors, ensuring compatibility with your system.

Our sensors can also be factory-configured with specific measuring ranges, output signals, or filtering options to match your application requirements.

If you need further customization, such as unique cable materials or special calibration, our support team is ready to assist in creating a solution that fits your exact specifications.

Copyright

© Copyright 2025 DIS Sensors bv.

This manual is subject to change without notice.

All rights according to the copyright remain explicitly reserved for DIS Sensors bv.

LRI Distribuída no Brasil pela LRI | vendas@lri.com.br | 51 2129-3000